Opel 4Cyl 2Inj Wasted Spark 5V Mag
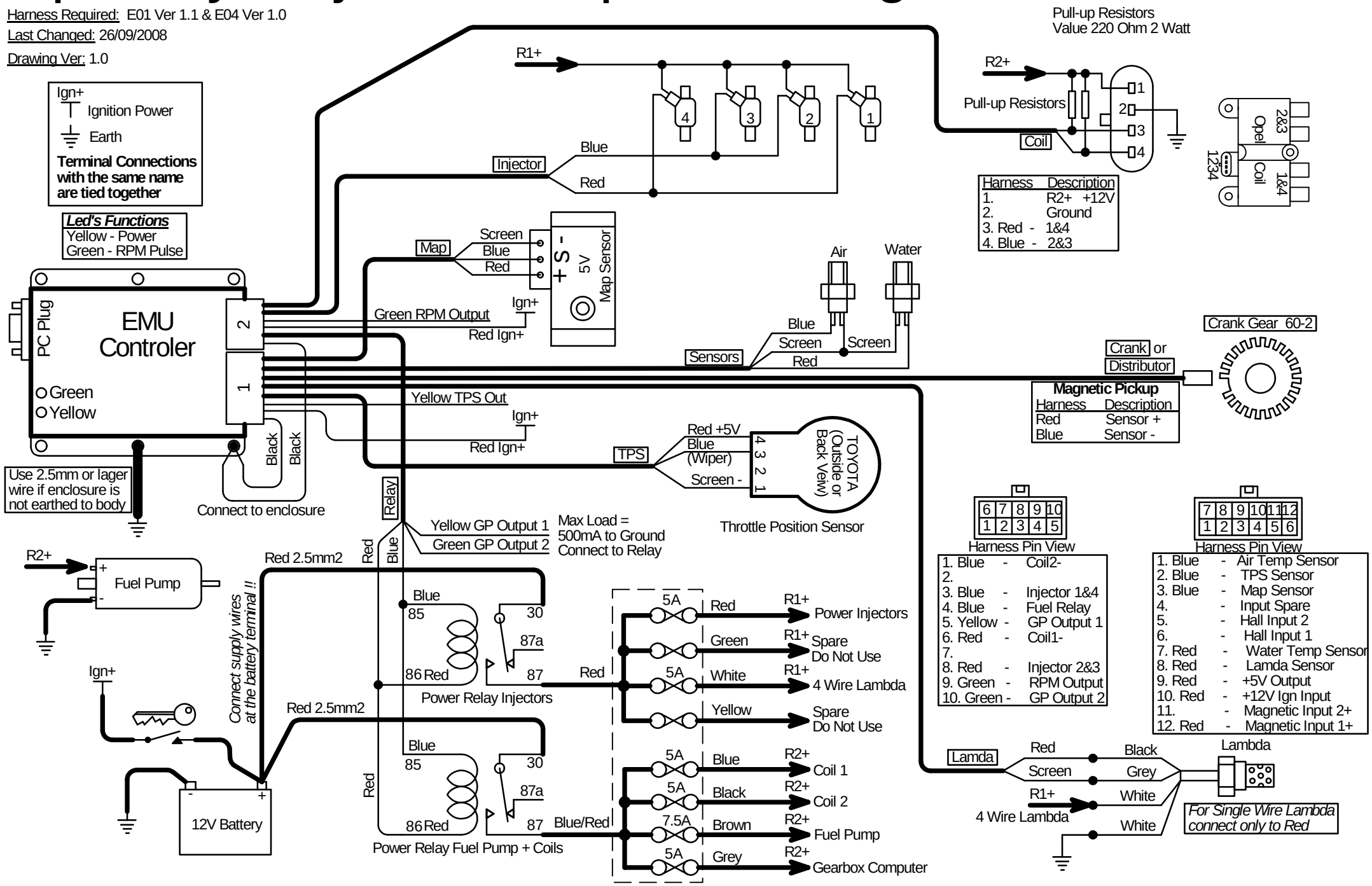
Harness Required: E01 Ver 1.1 & E04 Ver 1.0
Last Changed: 26/09/2008
Drawing Ver: 1.0