Subaru 36-1 4Cyl 4Coil 5V Mag
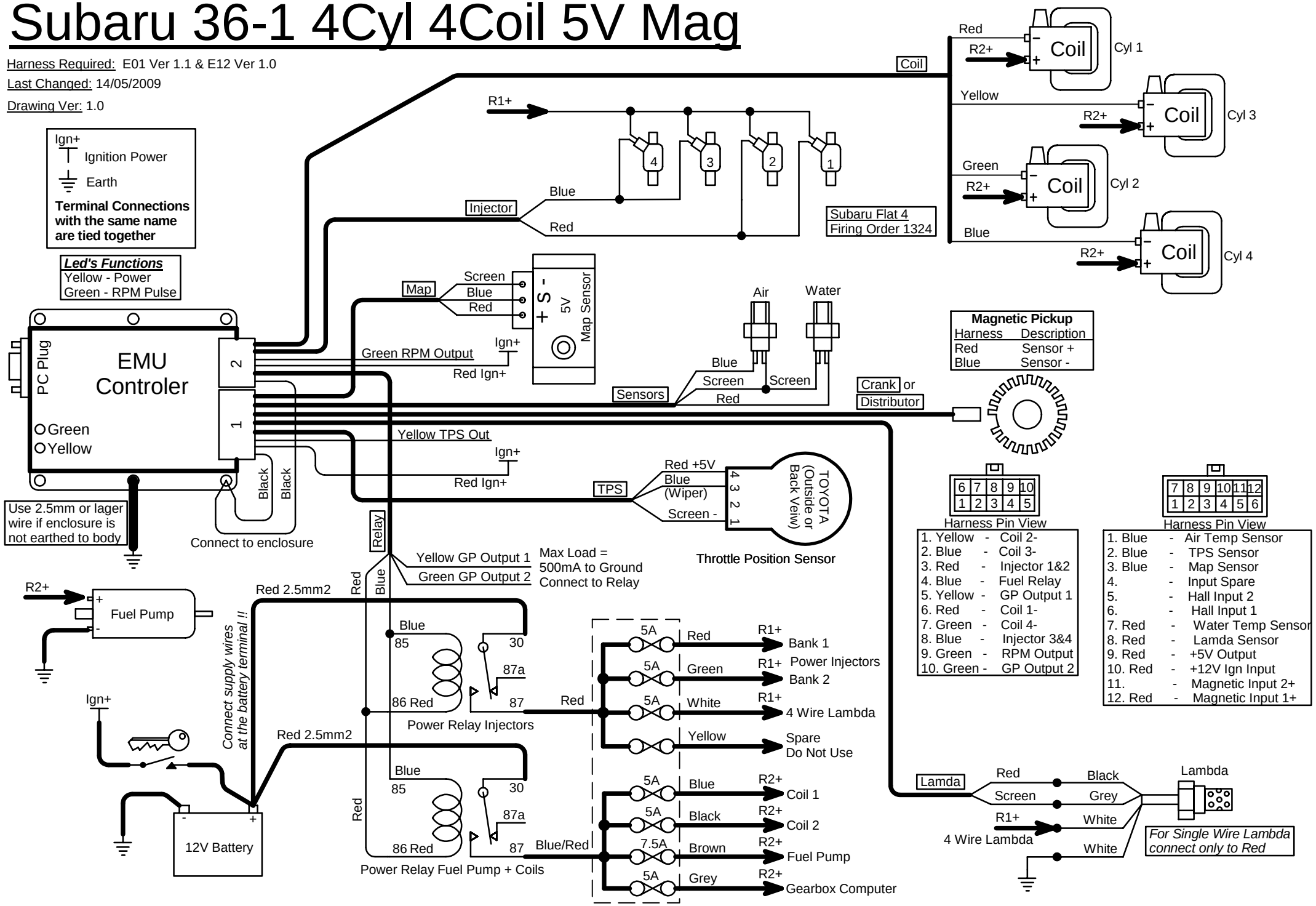
Harness Required: E01 Ver 1.1 & E12 Ver 1.0
Last Changed: 14/05/2009
Drawing Ver: 1.0