1Trig 4Cyl 1Coil 5V Mag

Harness Required: E01 Ver 1.1 & E04 Ver 1.0

Last Changed: 04/10/2009
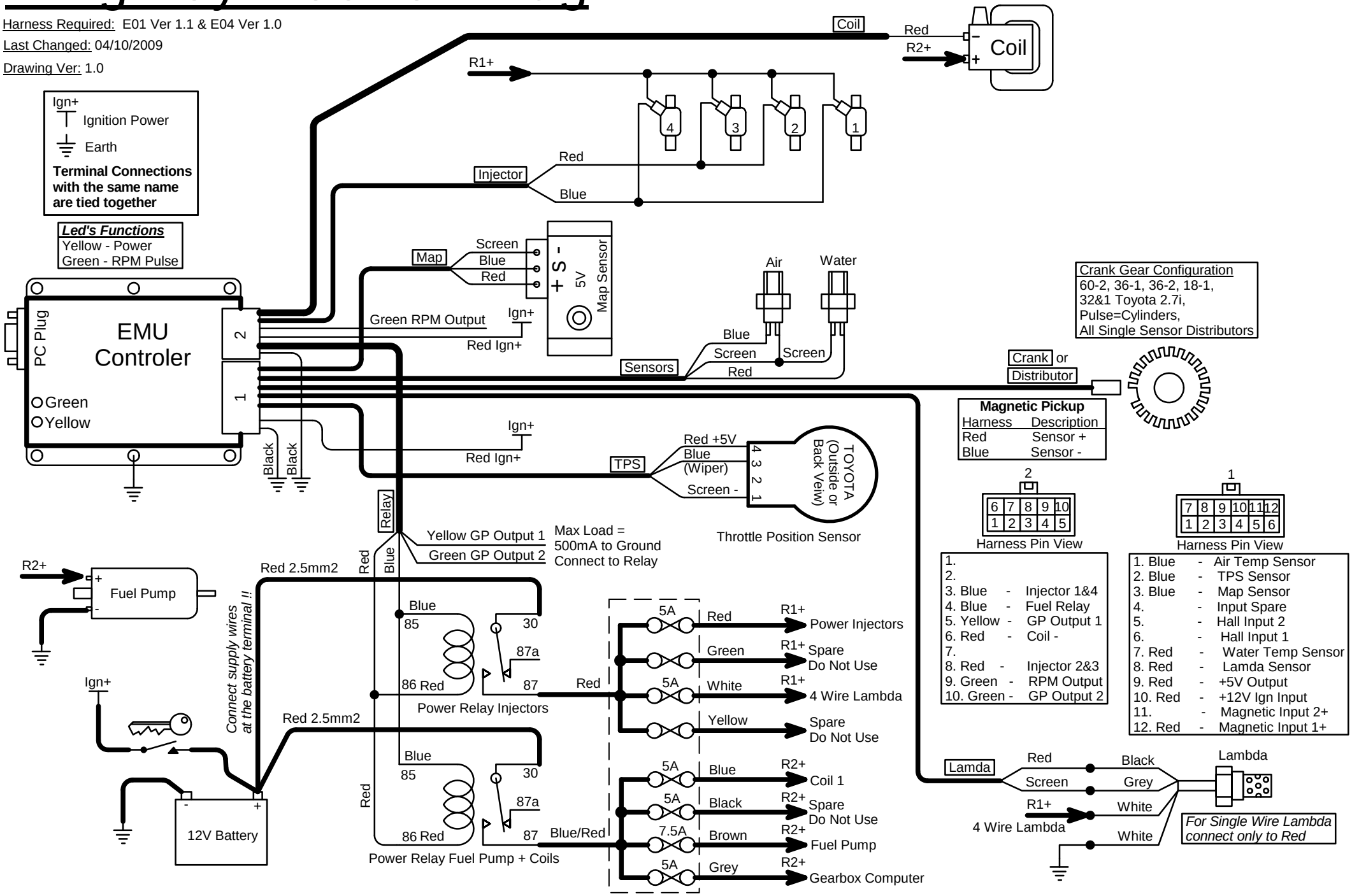
Drawing Ver: 1.0