Nissan 4Cyl 1Coil 5V Hall
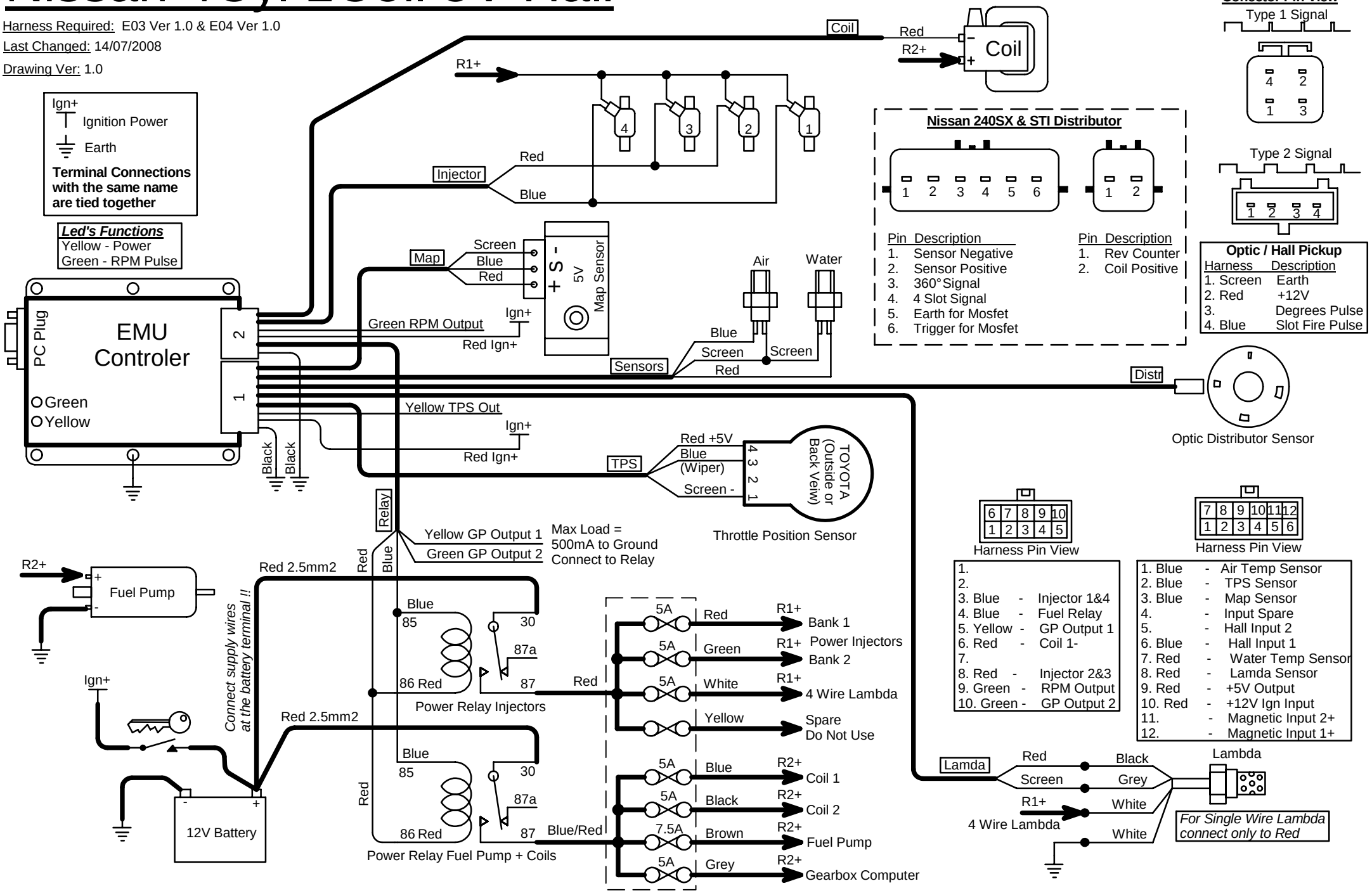
Harness Required: E03 Ver 1.0 & E04 Ver 1.0
Last Changed: 14/07/2008
Drawing Ver: 1.0