1Trig 6Cyl 1Coil 12V Hall
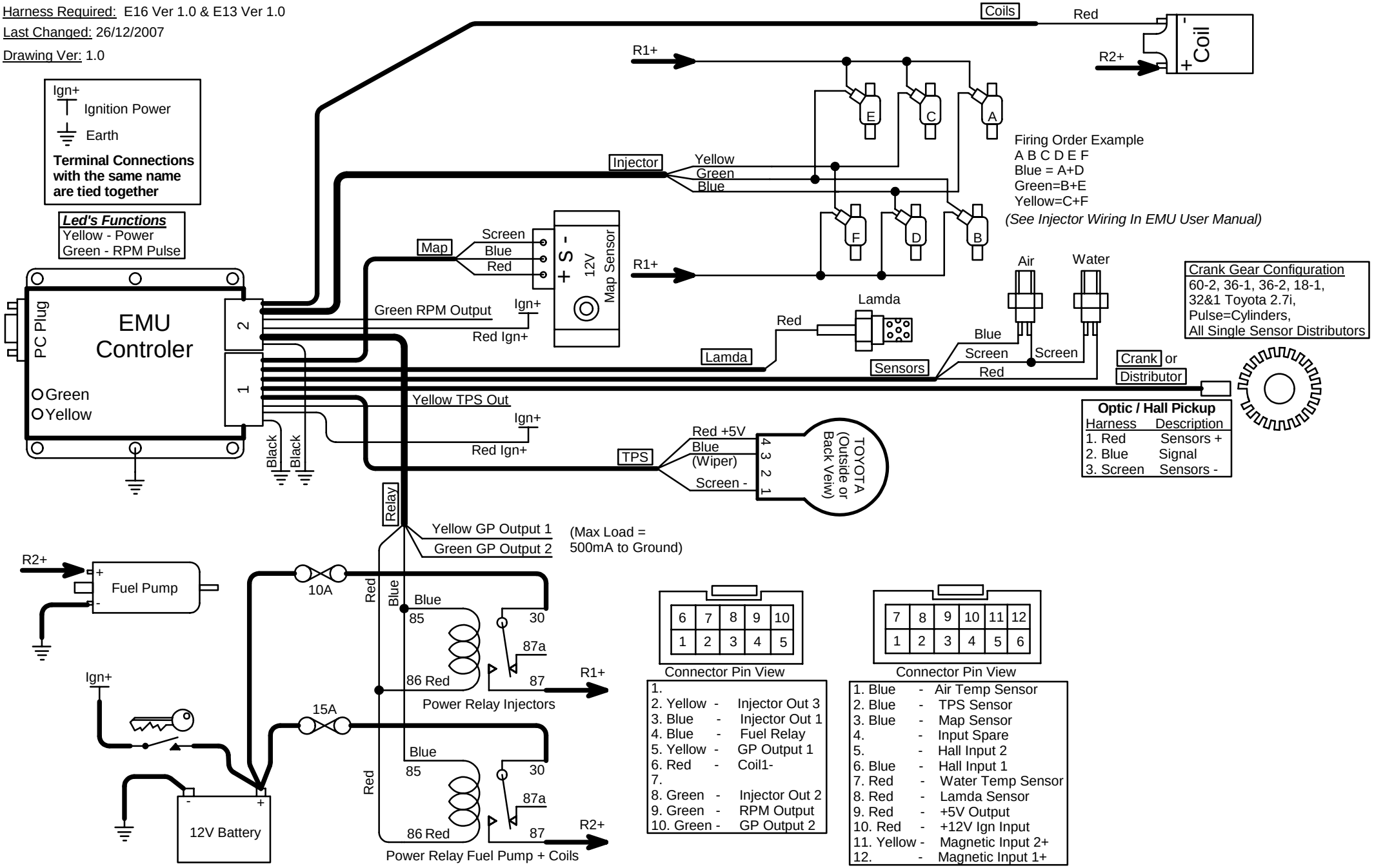
Harness Required: E16 Ver 1.0 & E13 Ver 1.0
Last Changed: 26/12/2007
Drawing Ver: 1.0