TITAN Standard SPCL
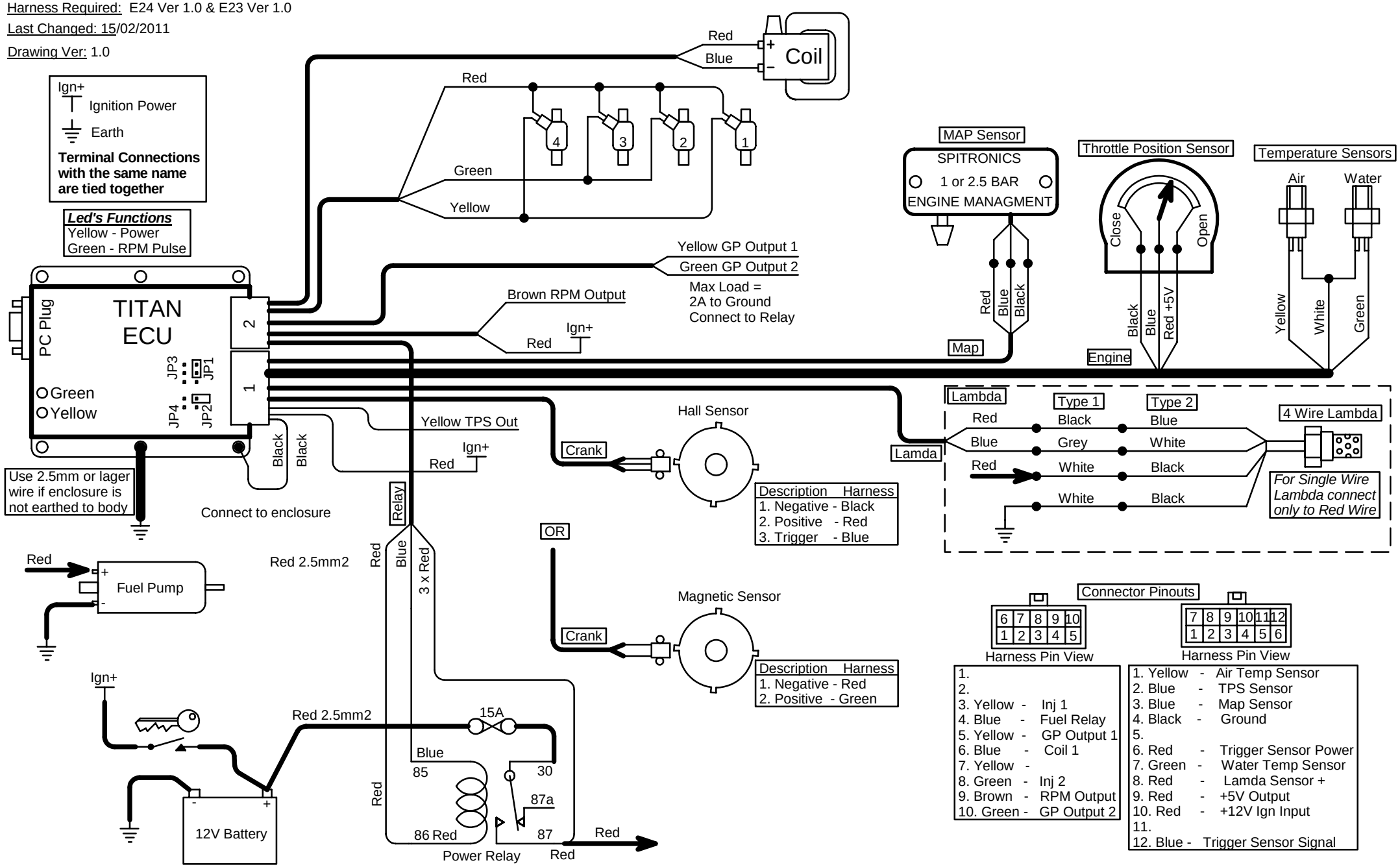
Harness Required: E24 Ver 1.0 & E23 Ver 1.0
Last Changed: 15/02/2011
Drawing Ver: 1.0