E24 Input Harness
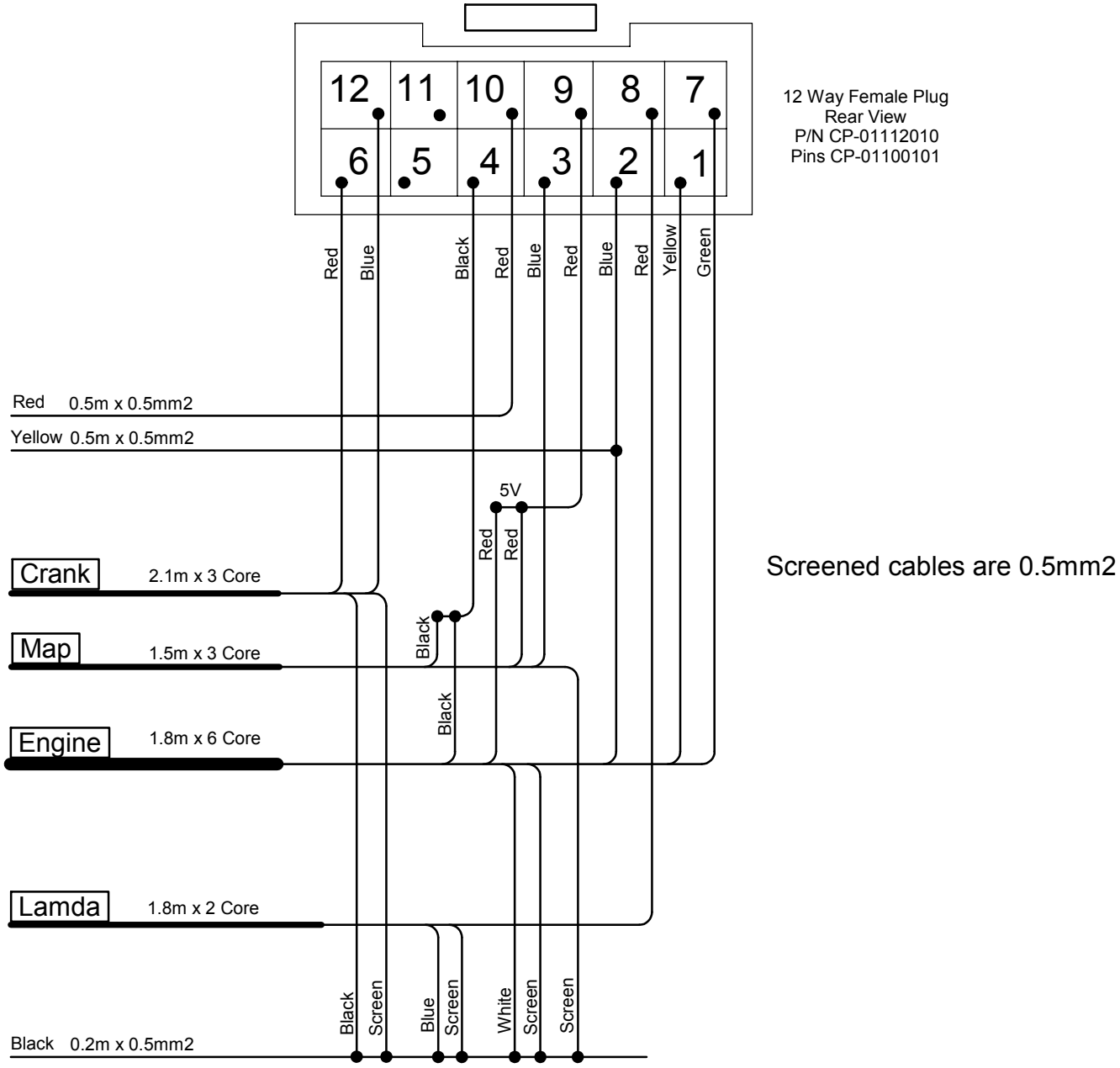
File Name: E24 Harness
Last Changed: 09/03/2015