Orion2 Driver Layout
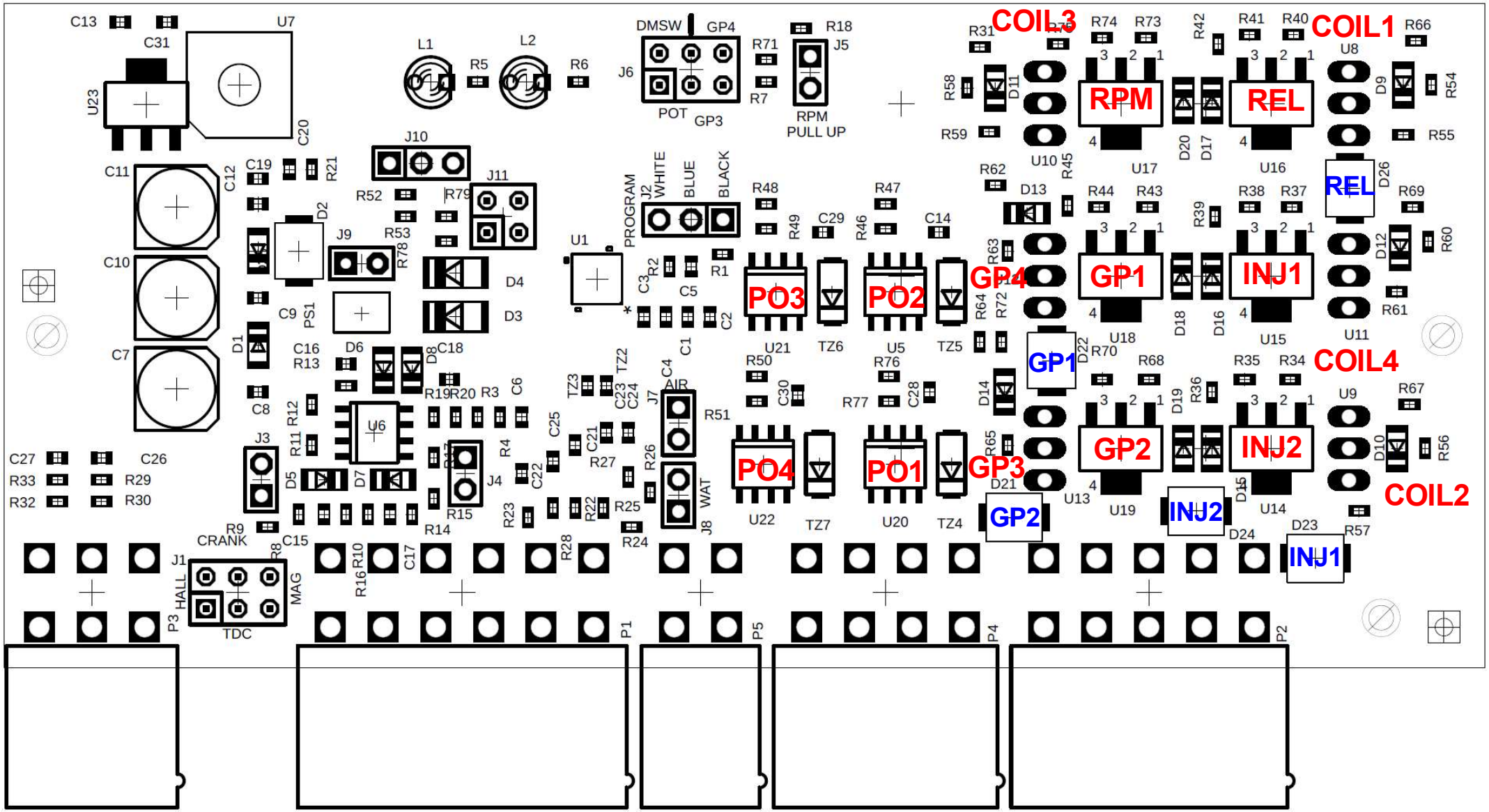
Last Changed: 25/11/2019