E23 Output Harness

File Name: E23 Harness

Last Changed: 28/07/2016

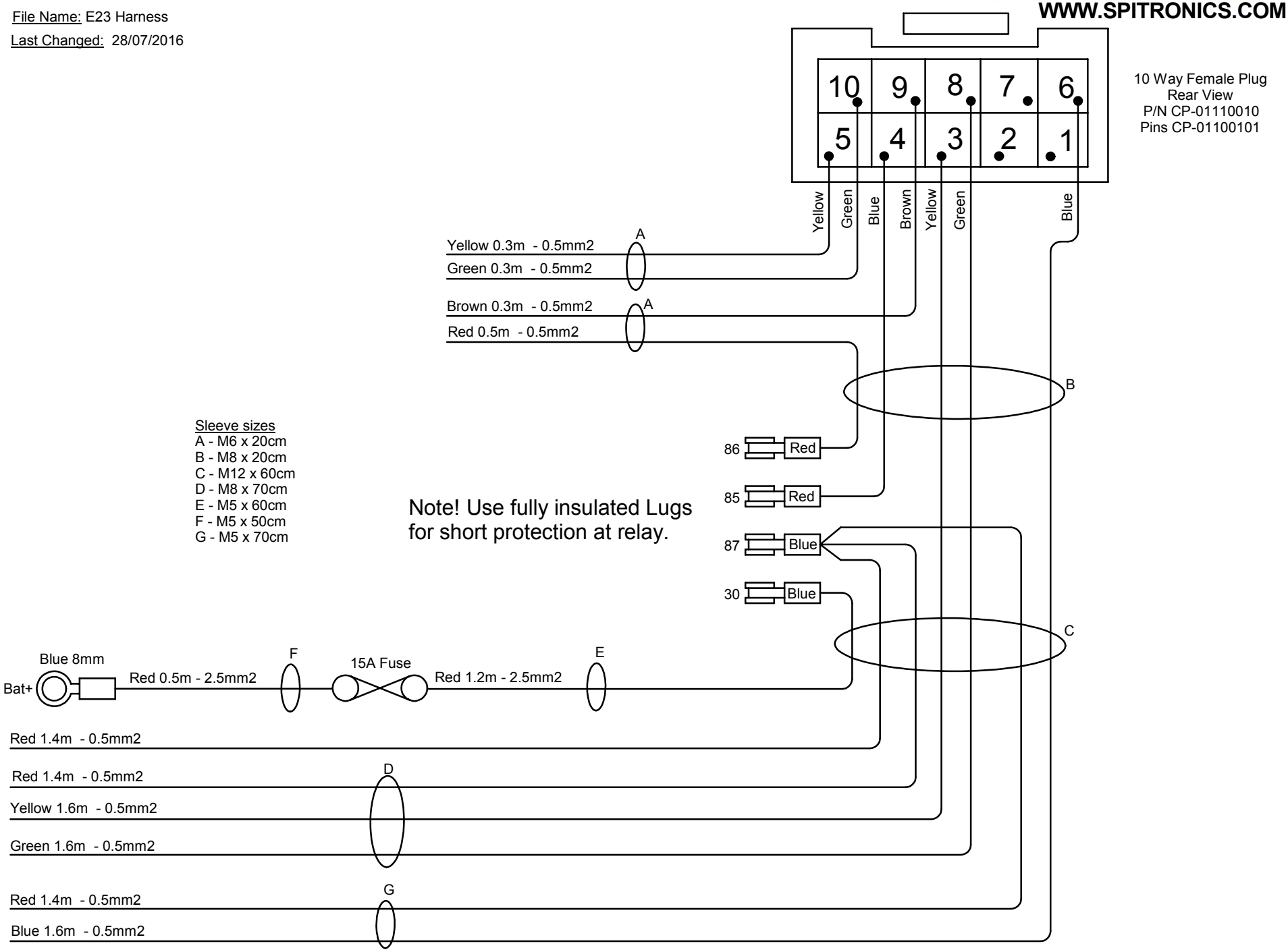

Sleeve sizes
A - M6 x 20cm
B - M8 x 20cm
C - M12 x 60cm
D - M8 x 70cm
E - M5 x 60cm
F - M5 x 50cm
G - M5 x 70cm

Note! Use fully insulated Lugs for short protection at relay.

SPITRONICS™
ENGINE MANAGEMENT SYSTEMS
WWW.SPITRONICS.COM